RevNo	Revision note	Date	Signature	Checked
0	GENERAL REVISION		IP	IP

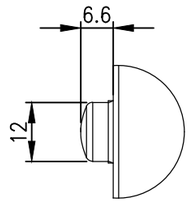

DETAIL A1

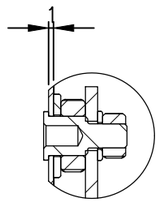

DETAIL A2

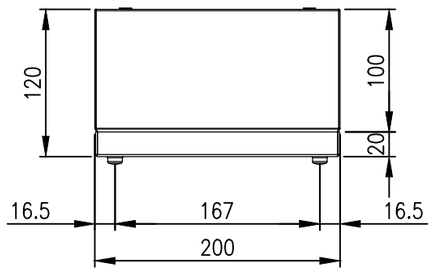

TOP VIEW

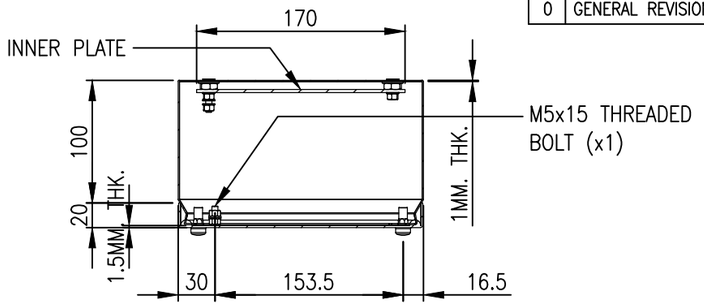

SECTION A–A

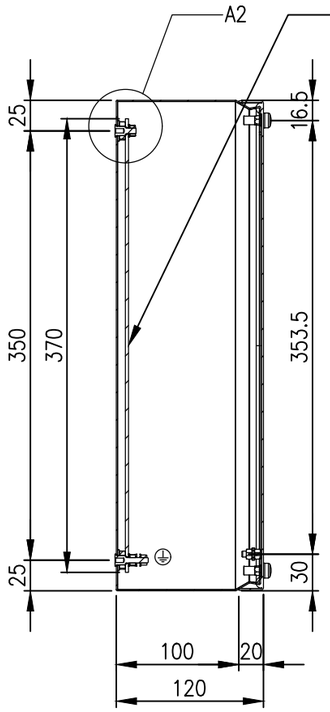

SECTION B–B

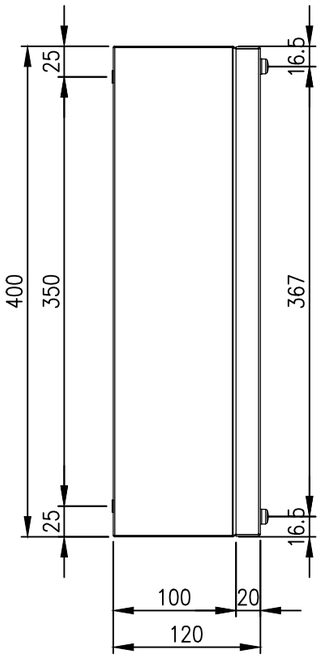

LEFT SIDE VIEW

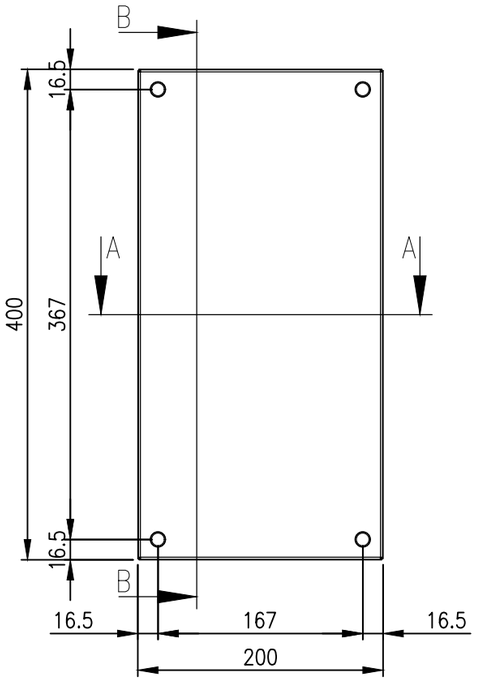

FRONT VIEW

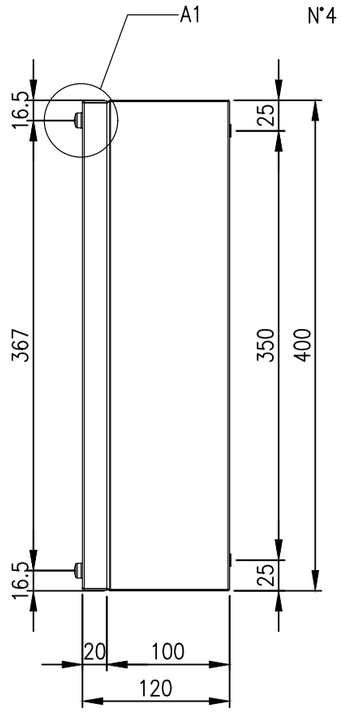

RIGHT SIDE VIEW

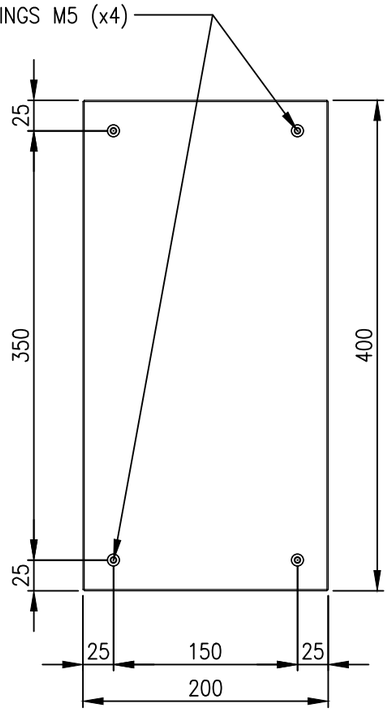

REAR VIEW

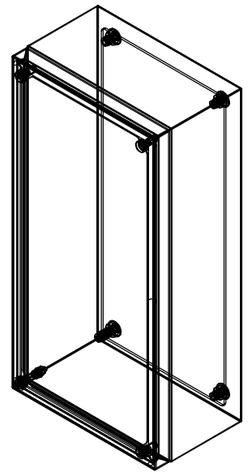

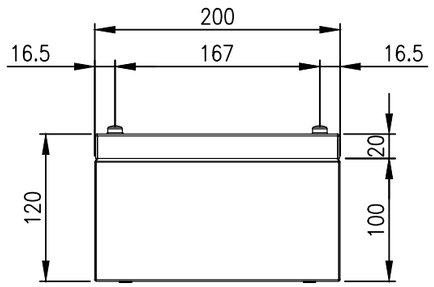

BOTTOM VIEW

MATERIAL
BODY: 1.0mm 304 STAINLESS STEEL
DOOR: 1.0mm 304 STAINLESS STEEL
SEAL: SILICONE

PROTECTION: IP66, IP67, NEMA4x,
UL 508A

© IP ENCLOSURES 2022.
THIS DRAWING SHALL NOT BE COPIED OR REPRODUCED
WITHOUT AUTHORISATION FROM IP ENCLOSURES.
www.ipenclosures.com.au

Itemref	Quantity	Title/Name, designation, material, dimension etc			Article No./Reference	
Designed by IP		Checked by IP	Approved by - date 24/05/22	Filename IP-304-T402012	Date 24/05/22	Scale 1:5
IP Enclosures		400x200x120 304SS TERMINAL BOX				
		IP-304-T402012			Edition 0	Sheet 1/1